BMK33

Ford 6.7L Single-Remote Bypass System
Installation and Servicing Instructions

IMPORTANT NOTICE
- Read **ALL** instructions completely.
- Improper installation can result in serious system and/or equipment damage. If you are uncomfortable with the instructions or have questions, **do not attempt installation**. Consult a mechanic or contact AMSOIL Technical Services at (715) 399-TECH for assistance.
- **WARNING:** Extreme care should be taken to avoid bodily harm during installation. Before beginning, ensure engine is cool to avoid burns. Never work in the engine compartment with the engine running. It is advised that you perform a full oil change with installation of this system.

A. BEFORE YOU BEGIN
1. Confirm all items on the Parts List are included in the system.
2. Ensure you have the required tools for the job.

RECOMMENDED TOOL LIST

- 5/16" drill bit
- 7/16" wrench
- 1/2" wrench
- 1/2" socket
- 9/16" wrench
- Torque wrench
- Hose cutter
- Utility knife
- Drain oil pan
- Adjustable filter wrench
- Center punch
- Drill
- Hammer
- Vice

PARTS LIST
Ford 6.7L Single-Remote Bypass System (BMK33)

Item	Description	Qty.	Part No.
1.	Filter Mount Assembly, - BMK21	1	BK303
2.	Fitting, 1/8" NPT to 7/16"-20 JIC	2	BP208
3.	5/16" Fender Washer	3	BP205
4.	5/16" Flat Washer	3	BP120
5.	5/16"-18 Self Locking Nut	3	BP121
6.	5/16"-18 x 1" Hex Head Bolt	3	BP122
7.	Hose, 1/4" I.D.	12'	BP251
8.	Fitting, 1/4" Hose, 7/16"-20 JIC	4	BP261
9.	Fitting, Street Elbow, 1/8" NPT	2	BP52
10.	BMK21 Mounting Template	1	BP501
11.	Filter Adapter, Aluminum, Ford/Cummins	1	BK1104
12.	Oil Fill Cap, Aluminum, Ford 6.7L	1	BK1103
13.	Fitting, 90°, 1/8" NPT to 7/16"-20 JIC	2	BP242
14.	AMSOIL Bypass Oil Filter	1	EABP110
	Plastic Tie	6	BP46
	Thread Sealant	2	BP198
	Instruction Sheet	1	BP615

OPTIONAL PARTS (Not Included)*

Description	Part No.
Assembly, Petcock Valve with 1/8" NPT Street Tee Fitting	BP67

*Not required, but available to ease oil sampling. Contact your AMSOIL Dealer to order.

B. ATTACHING FILTER MOUNT
1. Survey the engine compartment for possible mounting locations. The mount should be located as close to the existing full-flow filter as possible. Select an area where the filtration system will not be damaged by road debris or off-road travel, and make sure the mounting structure is adequate to carry the weight of the filtration system. Reference Diagram A for an approximation of space required for mounting the system and removing filters. Reference Diagram B for appropriate mounting angles. **Note:** AMSOIL does not recommend attaching the filter mount directly to the engine or to any customer-fabricated bracket attached to the engine.
2. When the mounting location has been determined, put the provided mounting template sticker in place. Using a center punch and hammer, mark the centers of the drilling locations.
3. Install 2 fitting adapters (BP208) into the "IN" and "OUT" of the BK303 using provided thread sealant as noted in Diagram C. If desired, 90° angle fitting (BP52) may also be used. Tighten fittings 2-3 turns beyond finger-tight. Keep in mind the direction you wish to have the hoses intersect the mount.
4. With a 5/16" drill bit, drill the center-punched holes on the template, remove the sticker and attach the BK303 using the (3) 5/16" bolts, nuts, small washer and fender washers provided. Use a wrench to hold either the nut or bolt in place; use the socket and torque wrench on the opposite end to tighten to 16-18 ft-lbs.
5. Fill the Bypass Filter element with the same engine oil being used in the vehicle. Lubricate the filter gasket with oil and spin filter onto mount. Tighten per instructions on the filter.

C. OIL SUPPLY LINE INSTALLATION
- **NOTE:** The hose and hose fittings supplied with this kit are matched to provide maximum performance and life expectancy. Interchanging with other types or brands is not recommended and should be avoided. Should additional hose be required, it may be obtained from AMSOIL by ordering part number BP251 by the foot.
- **DO NOT** install oil hoses near hot exhaust parts or near sharp metal components that could cause abrasive wear.
- **DO NOT** create sharp bends in oil hoses when installing.

1. Locate the oil filter on the engine, underneath the vehicle.
2. Using an oil drain pan to capture lost oil, remove the existing full-flow oil filter. Clean the gasket seating area on the engine with a lint-free cloth. It is preferred that you perform a complete oil and filter change when installing a bypass system.
3. Install a BP242 into the side of the BK1104 with thread sealant as noted in Diagram C. Tighten 2-3 turns beyond finger-tight. Keep in mind the direction you wish the hose to intersect the adapter.
4. Using thread sealant, install the BK1104 to the full-flow gasket seating area on the engine. Tighten the adapter nut to 50 ft-lbs. Install a new full-flow engine oil filter onto the BK1104 according to the instructions on the filter.
5. Measure the amount of hose (BP251) required to route from the BK1104 to the filter mount fitting labeled **IN**. Additional length will be required to accommodate engine movement during operation.

6. **HOSE FITTING ASSEMBLY INSTRUCTIONS**

a. Using a utility knife or hose cutter, squarely cut the hose to the proper length (Figure 6a).

b. Install BP261 on both ends of the cut hose. Screw nut portion of the fitting counter-clockwise onto hose until it bottoms. Back hose out 1/2 turn (Figure 6b).

Note: Do not use any form of thread sealant anywhere on the hose fittings (BP261).

c. Oil tapered nipple thread areas liberally with oil. You may also oil inside of hose. Do not oil hose cover (Figure 6c).

d. Screw nipple thread into socket using wrench on nipple hex until nipple hex shoulders against socket (Figures 6d, 6e, 6f).

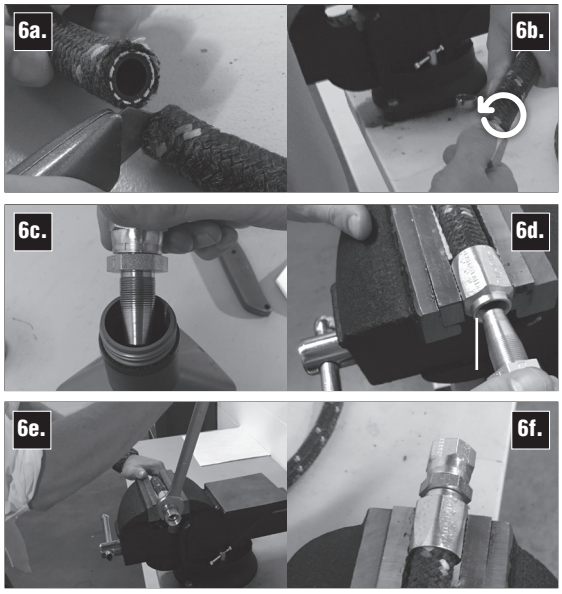

7. Route and connect the hose assembly. Ensure a minimum of a 3⁄4" bend radius is maintained. Also, bends in hose should not begin at hose fittings. On both ends of the hose assembly, tighten the nut of the BP261 finger-tight. Place a mark on the ridge between two flats. Starting from this position, tighten the nut further by two flats or 1/3 of a turn using one wrench to hold the BP208 (or BP242) and the other to turn the nut on the BP261. (A flat is referred to as one side of the hexagonal tube nut and equates to 1/6 of a turn.)

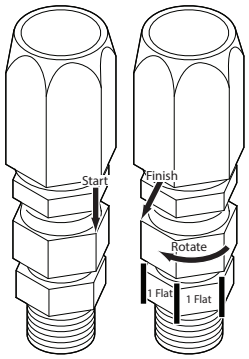

Caution: Do not introduce a twist to the hose when tightening the BP261 to the BP208 (or BP242).

D. OIL RETURN LINE INSTALLATION

a. Remove the existing oil filler cap. Be sure there is not a PCV pick-up in this area.

b. Install the BK1103, making sure to properly screw it into the oil fill port.

c. Install a BP242 into the top of the BK1103 with thread sealant as noted in Diagram C. Tighten 2-3 turns beyond finger-tight.

d. Measure the amount of hose (BP251) you will need to route from the BK1103 to the filter mount fitting labeled **OUT**. Additional length will be required to accommodate engine movement during operation. Using a utility knife, squarely cut the hose to the proper length.

e. Install BP261 on both ends of the hose. See Section C.6.

f. Route and connect the hose assembly. Ensure a minimum of a 3⁄4" bend radius is maintained. Also, bends in hose should not begin at hose fittings. On both ends of the hose assembly, tighten the nut of the BP261 finger-tight. Place a mark on the ridge between two flats. Starting from this position, tighten the nut further by two flats or 1/3 of a turn using one wrench to hold the BP208 (or BP242) and the other to turn the nut on the BP261. (A flat is referred to as one side of the hexagonal tube nut and equates to 1/6 of a turn.)

g. Use plastic ties (BP46) to secure hoses in position and away from damage. Trim ties.

Note: Over tightening the plastic ties may cause the hose to collapse and restrict oil flow.

E. START UP PROCEDURES



1. Check that all fittings and hoses are securely attached, and that the hoses are routed properly.
2. Check engine oil level. Fill to full mark on engine dipstick.
3. With the equipment secured start the engine and immediately check oil pressure. **Note:** Pressure may initially take a moment or two to rise.

Caution: Carefully check for leaks at fittings, hoses and mount. If leaks are observed, **STOP ENGINE IMMEDIATELY**, repair leaks and continue.

4. After engine has warmed, shut off and re-check engine oil level. Fill as necessary.
5. Record vehicle mileage/operating hours and date of installation.

F. PERIODIC MAINTENANCE

1. During the warranty period, annually inspect the fittings and hoses. Check for leaks, hose deterioration and cuts. Repair and/or replace as necessary. See the AMSOIL Limited Warranty–Bypass Filter Systems at www.amsoil.com for complete information.
2. Refer to recommended filter change intervals for servicing intervals.
3. To change the bypass filter element:
   a. Ensure engine is off and use caution as the engine, oil and filter may be hot and could result in an injury.
   b. Using a filter wrench, remove the filter element. Dispose of properly.
   c. Clean the filter gasket contact area on the mount with a clean, lint-free rag.
   d. Lubricate the new filter gasket with clean oil.
   e. Fill filter as full as possible with the same oil used in the engine.
   f. Screw on new filter, tighten per instructions on the filter.
   g. Start engine and check for leaks.
   h. Check engine oil level, fill as needed.
4. Record date of installation and equipment operating hours or mileage for future reference.

Diagram A

MINIMUM AREA NEEDED FOR MOUNT AND OIL FILTER ELEMENT
*Mount and element heights plus 1-inch removal clearance

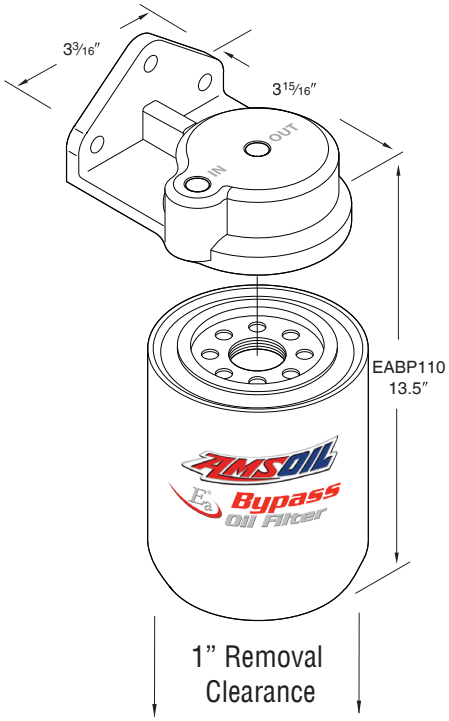

Mounting Angle Diagram B

(Recommendations are the same right to left and front to back)
Mounting angle above horizontal is not recommended

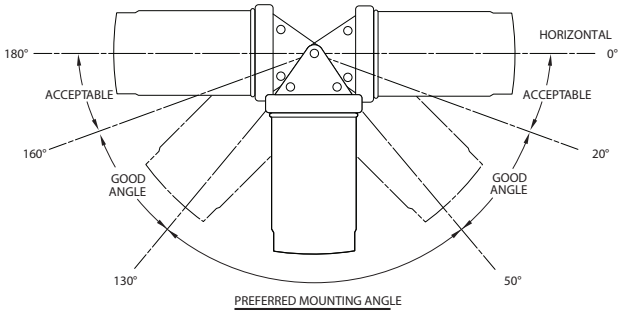

Diagram C

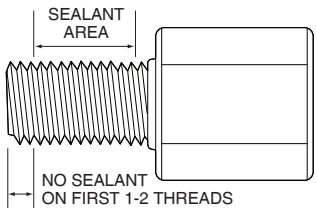

Diagram D

Maximum Bend Radius

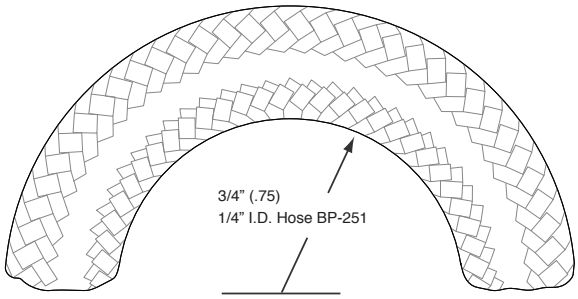

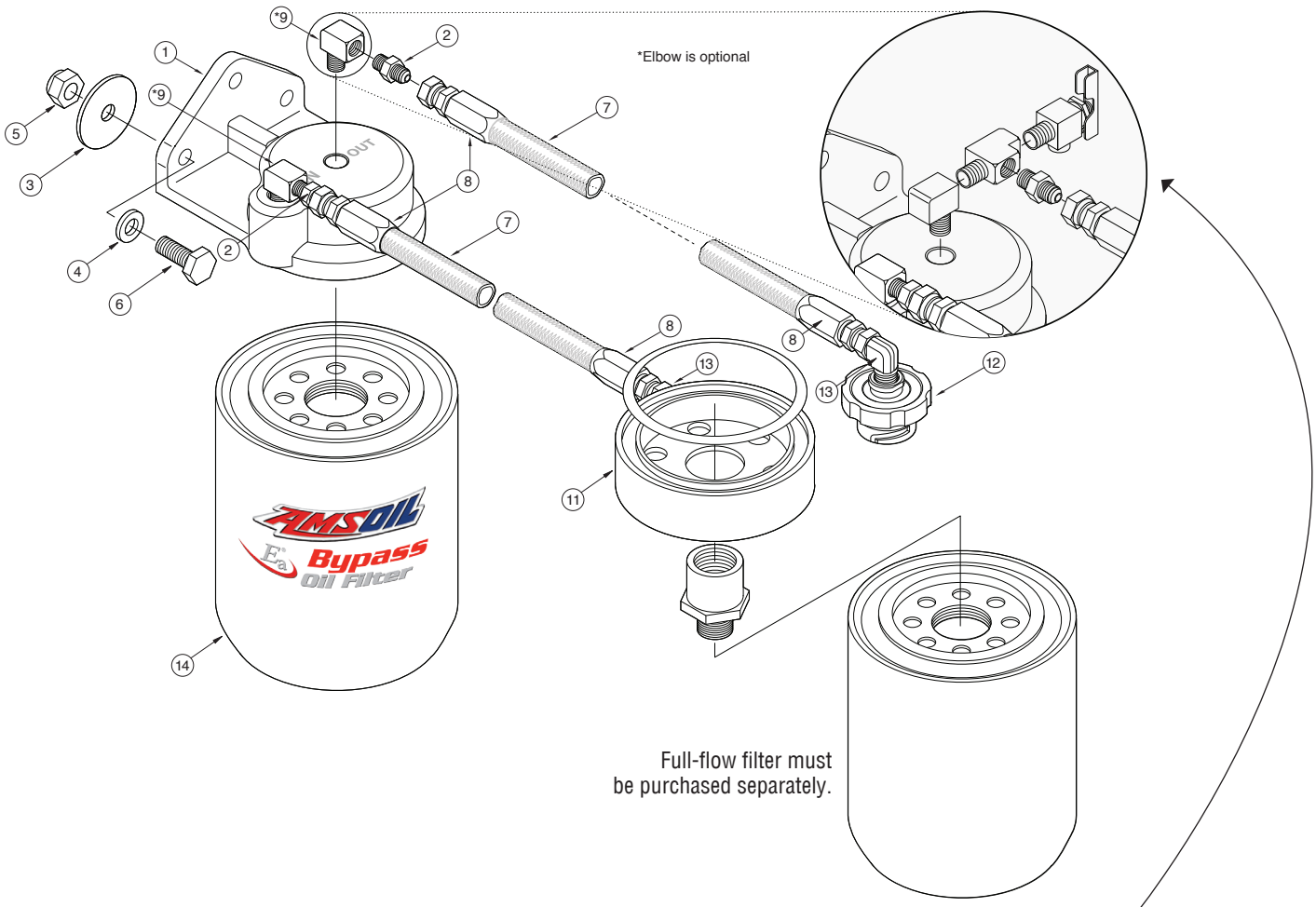

Installing an oil sampling petcock:
Getting a clean and uncontaminated oil sample is easy and simple when an oil sampling petcock is installed into a Bypass Oil Filter system. This can be easily done by ordering a BP67 Kit and installing it into the bypass system as shown here.

© 2026, AMSOIL INC. All rights reserved. The AMSOIL logo is a registered trademark of AMSOIL INC.